SPECIFICATIONS FOR LCD MODULE

MODEL NO.
BG12864C1FPHHn$
VER.01

FOR MESSRS:

_____

ON DATE OF:

_____

APPROVED BY:

_____

BOLYMIN, INC.
5F, NO.38,Keya Road , Daya Township, Taichung County 42878, Taiwan, R.O.C.
Web Site:http://www.bolymin.com.tw TEL:+886-4-25658689 FAX:+886-4-25658698

History of Version

Version	Contents	Date	Note
01	NEW VERSION	2011/05/10	SPEC.

C O N T E N T S

1. Numbering System

2. General Specification

3. Absolute Maximum Ratings

4. Electrical Characteristics

5. Optical Characteristics

6. Interface Pin Function

7. Timing characteristics

8. Power supply for LCD Module and LCD operating voltage adjustment

9. Backlight information

10. Display control instruction

11. Quality Assurance

12. Reliability

13. Drawing

1. Numbering System

	B	G	12864	C1	F	P	H	-	H	n$
	0	1	2	3	4	5	6	7	8	9

0	Brand	Bolymin	
1	Module Type	C= character type G= graphic type P= TAB/TCP type	O= COG type F= COF type L=PLED/OLED
2	Format	2002=20 characters, 2 lines 12232= 122 x 32 dots	
3	Version No.	A type	
4	LCD Color	G=STN/gray Y=STN/yellow-green PLED/yellow-green C=color STN,OLED/RGB	B=STN/blue,OLED/blue F=FSTN T=TN D=OLED/blue+yellow A=OLED/blue+yellow+green
5	LCD Type	R=positive/reflective P=positive/transflective	M=positive/transmissive N=negative/transmissive
6	Backlight type/color	L=LED array/ yellow-green H=LED edge/white R=LED array/red G=LED edge/yellow-green F=RGB array I=RGB edge Q=LED edge/red N=No backlight	D=LED edge/blue E=EL/white B=EL/blue C=CCFL/white Y=LED Bottom/yellow O=LED array/orange K=LED edge/green A=LED edge/amber
7	CGRAM Font (applied only on character type)	J=English/Japanese Font E=English/European Font G=Chinese(simple) F=Chinese(traditional)	C=English/Cyrillic Font H=English/Hebrew Font A=English/Arabic Font
8	View Angle/ Operating Temperature	B=Bottom/Normal Temperature H=Bottom/Wide Temperature U=Bottom/Ultra wide Temperature	T=Top/Normal Temperature W=Top/Wide Temperature C=9H/Normal Temperature E=Top/ultra wide temperature
9	Special Code	3=3 volt logic power supply n=negative voltage for LCD c=cable/connector	t=temperature compensation for LCD p=touch panel $=RoHS

2. General Specification

(1) Mechanical Dimension

Item	Standard Value	Unit
Number of dots	128×64	dots
Module dimension (L*W*H)	78.0*70.0*14.3(Max)	mm
View area	62(W)×44(H)	mm
Active area	56.3(W)×33.384(H)	mm
Dot size	0.42(W)×0.58(H)	mm
Dot pitch	0.44(W)×0.60(H)	mm

(2) Controller IC: NT7107/7108

(3) Temperature Range

	Wide
Operating	-20 ~ +70℃
Storage	-30 ~ +80℃

3. Absolute Maximum Ratings

Item	Symbol	Min	Typ	Max	Unit
Operating Temperature	T_{OP}	0	—	+50	℃
Storage Temperature	T_{ST}	-10	—	+60	℃
Input Voltage	V_I	0	—	V_{CC}	V
Supply Voltage For Logic	V_{CC}	0	—	7	V
Supply Voltage For LCD	V_{CC}-V_{LCD}	0	—	16.7	V
Supply Voltage For LCD	V_{OUT}	—	—	-5	V

4. Electrical Characteristics

Item	Symbol	Condition	Min.	Typ.	Max.	Unit
Supply Voltage For Logic	V_{DD}-V_{SS}	—		3.0	—	V
Supply Voltage For LCD	V_{DD}-V_0	Ta=-20℃ Ta=25℃ Ta=+70℃	— — —	9.3 9.0 8.7	— — —	V V V
Input High Vol	V_{IH}	—	2.0	—	V_{DD}	V
Input Low Vol	V_{IL}	—	0	—	0.8	V
Output High Vol	V_{OH}	—	2.4	—	—	V
Output Low Vol.	V_{OL}	—	—	—	0.4	V
Supply Current	I_{DD}	—	—	13.0	—	mA

5. Optical Characteristics

a. FSTN

Item	Symbol	Condition	Min.	Typ.	Max.	Unit
View Angle	(V) θ	CR≧3	10		60	deg
	(H) φ	CR≧3	-45		45	deg
Contrast Ratio	CR	—		5		—
Response Time 25℃	T rise	—		100	150	ms
	T fall	—		150	200	ms

5.1 Definitions

■View Angles

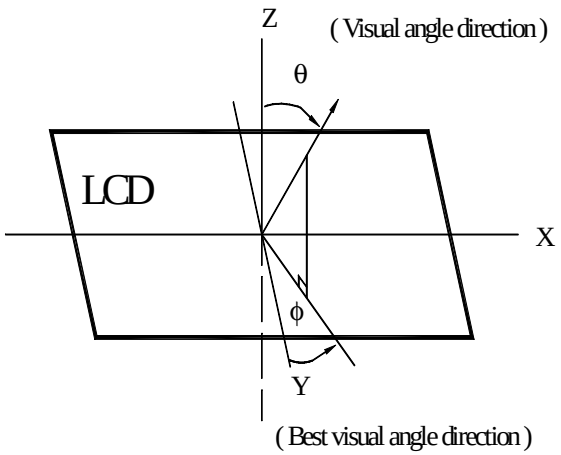

■Contrast Ratio

$$CR = \frac{\text{Brightness at selected state (BS)}}{\text{Brightness at non-selected state (Bns)}}$$

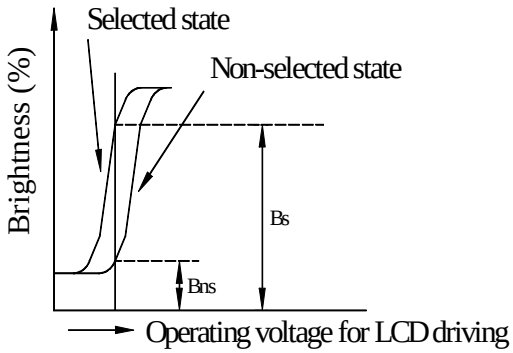

■Response time

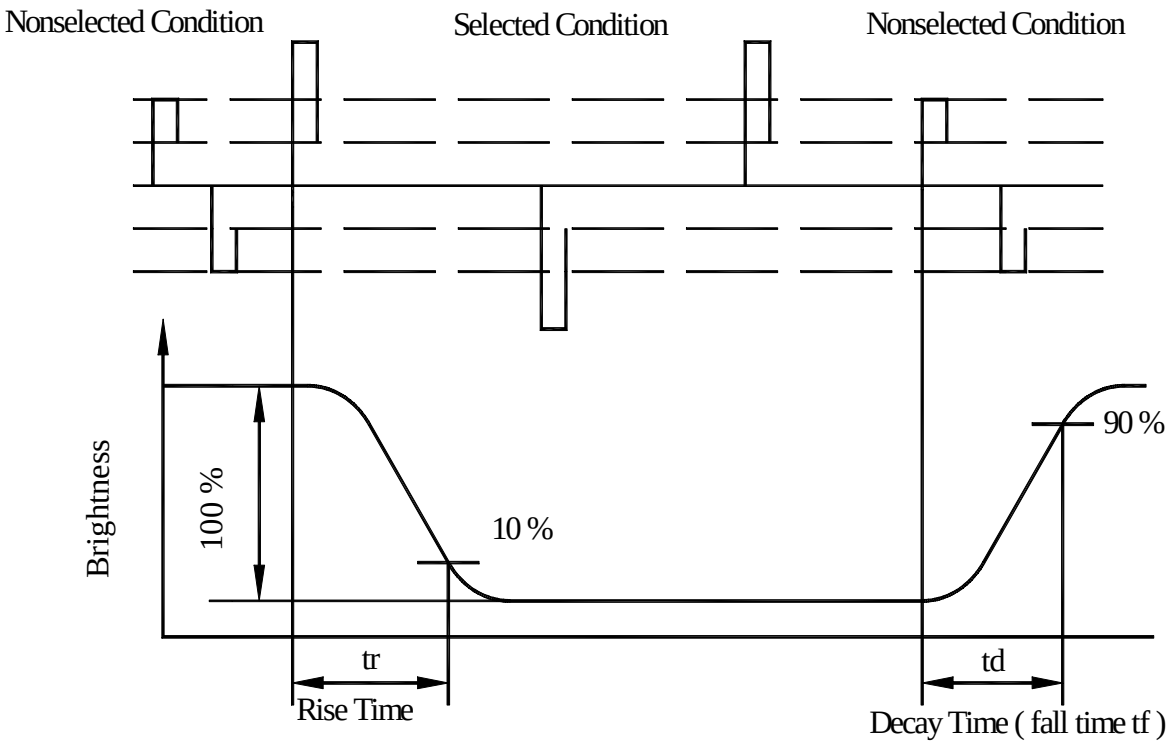

6. Interface Pin Function

Pin No.	Symbol	Level	Description
1	CS1		Chip Select for IC1
2	CS2		Chip Select for IC2
3	Vss	0V	Ground
4	Vdd	5.0V	Supply voltage for logic
5	V_O	(Variable)	Operating voltage for LCD
6	D/I	H/L	H: Data , L: Instruction
7	R/W	H/L	H: Read(MPU←Module) , L :Write(MPU→Module)
8	E	H	Enable signal
9	DB0	H/L	Data bus line
10	DB1	H/L	Data bus line
11	DB2	H/L	Data bus line
12	DB3	H/L	Data bus line
13	DB4	H/L	Data bus line
14	DB5	H/L	Data bus line
15	DB6	H/L	Data bus line
16	DB7	H/L	Data bus line
17	/RST	L	Reset signal
18	Vee		Negative Voltage output
19	A	—	Power supply for B/L (+)
20	K	—	Power supply for B/L (GND)

7. Timing Characteristics

MPU Write Timing

Characteristic	Symbol	Min	Typ	Max	Unit
E cycle	tc	1000	—	—	ns
E high level width	tWH	450	—	—	ns
E low level width	tWL	450	—	—	ns
E rise time	tR	—	—	25	ns
E tall time	tF	—	—	25	ns
Address set-up time	tASU	140	—	—	ns
Address hold time	tAH	10	—	—	ns
Data set-up time	tDSU	200	—	—	ns
Data delay time	tD	—	—	320	ns
Data hold time(write)	tDHW	10	—	—	ns
Data hold time(read)	tDHR	20	—	—	ns

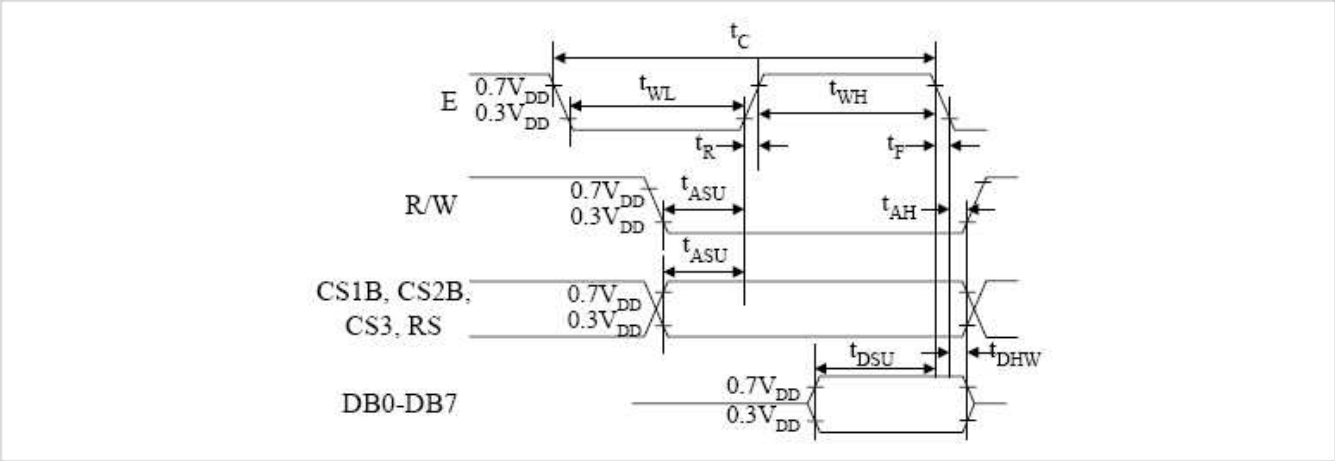

MPU Write Timing

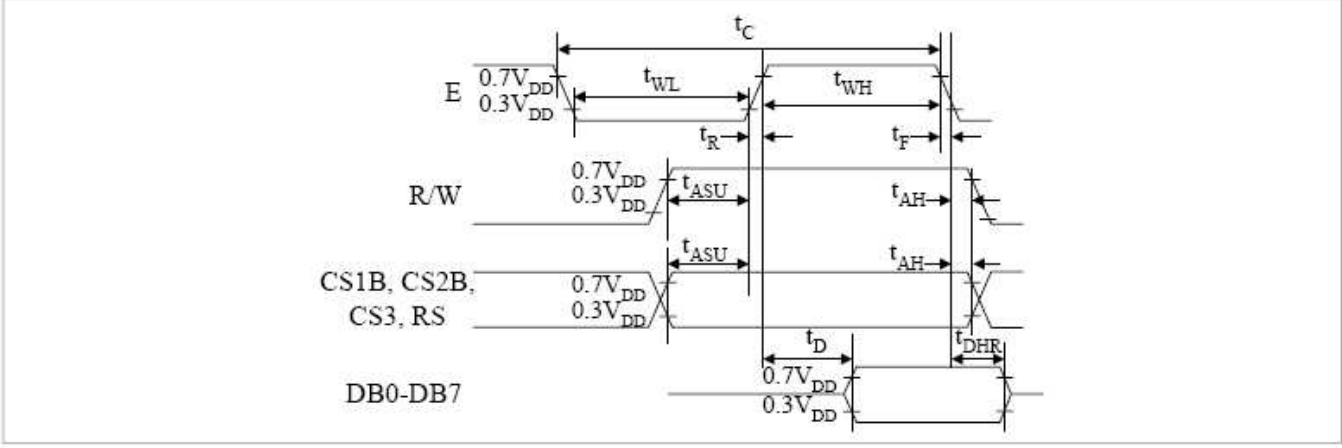

MPU Read Timing

8. Power Supply for LCD Module and LCD Operating Voltage a Adjustment

∗LCM operating on " DC 5V " input with built-in negative voltage

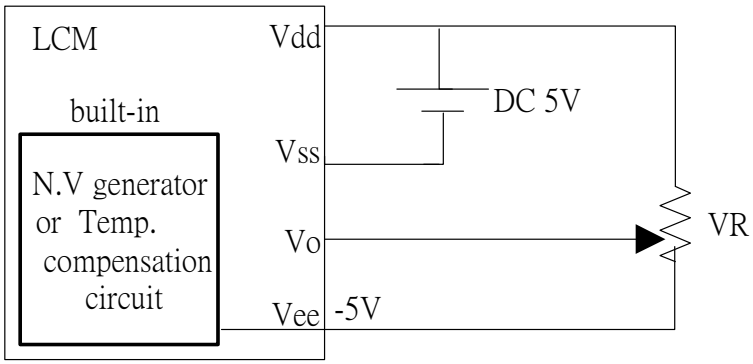

9. Backlight Information

9.1 Specification

(1) LED edge/white

Parameter	Symbol	Min	Typ	Max	Unit	Test Condition
Supply Current	ILED	—	100	—	mA	V=3.5V
Supply Voltage	V	3.2	3.5	3.8	V	—
Reverse Voltage	VR	—	—	5	V	—
Luminous Intensity	IV	—	50	—	cd/m^2	ILED=100mA
CIE Chromaticity Diagram	X	0.26	—	0.31	nm	ILED=100mA
	Y	0.27	—	0.32		
Life Time	—	—	20000	—	Hr.	V≦3.5V
Color	White					

9.2 Backlight driving methods

a. LED B/L drive from pin19 (LED+) pin20 (LED-)

a.1 edge / white

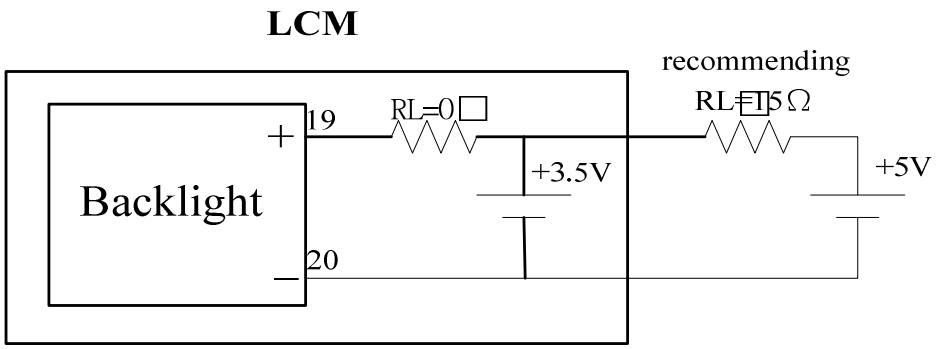

10. Display Control Instruction

The display control instructions control the internal state of the NT7108. Instruction is received from MPU to NT7108 for the display control. The following table shows various instructions.

Instruction	D/I	R/W	DB7	DB6	DB5	DB4	DB3	DB2	DB1	DB0	Function
Display ON/OFF	0	0	0	0	1	1	1	1	1	0/1	Controls the display on or off. Internal status and display RAM data are not affected. 0:OFF, 1:ON
Set Address	0	0	0	1	Y address (0~63)						Sets the Y address in the Y address counter.
Set Page (X address)	0	0	1	0	1	1	1	Page (0 ~7)			Sets the X address at the X address register.
Display Start Line	0	0	1	1	Display start line(0~63)						Indicates the display data RAM displayed at the top of the screen.
Status Read	0	1	BUSY	0	ON/OFF	RESET	0	0	0	0	Read status. BUSY 0:Ready 1:In operation ON/OFF 0:Display ON 1:Display OFF RESET 0:Normal 1:Reset
Write Display Data	1	0	Display Data								Writes data (DB0:7)into display data RAM. After writing instruction, Y address is increased by 1 automatically.
Read Display Data	1	1	Display Data								Reads data (DB0:7) from display data RAM to the data bus.

10.1 Detailed Explanation

Display On/Off

R/W	D/I	DB7	DB6	DB5	DB4	DB3	DB2	DB1	DB0
0	0	0	0	1	1	1	1	1	D

The display data appears when D is and disappears when D is 0. Though the data is not on the screen with D = 0, it remains in the display data RAM. Therefore, you can make it appear by changing D = 0 into D = 1.

Display Start Line

R/W	D/I	DB7	DB6	DB5	DB4	DB3	DB2	DB1	DB0
0	0	1	1	A	A	A	A	A	A

Z address AAAAAA (binary) of the display data RAM is set in the display start line register and displayed at the top of the screen. Figure 2. shows examples of display (1/64 duty cycle) when the start line = 0-3. When the display duty cycle is 1/64 or more (ex. 1/32, 1/24 etc.), the data of total line number of LCD screen, from the line specified by display start line instruction, is displayed.

Set Page (X Address)

R/W	D/I	DB7	DB6	DB5	DB4	DB3	DB2	DB1	DB0
0	0	1	0	1	1	1	A	A	A

X address AAA (binary) of the display data RAM is set in the X address register. After that, writing or reading to or from MPU is executed in this specified page until the next page is set. See Figure 1.

Set Y Address

R/W	D/I	DB7	DB6	DB5	DB4	DB3	DB2	DB1	DB0
0	0	0	1	A	A	A	A	A	A

Y address AAAAAA (binary) of the display data RAM is set in the Y address counter. After that, Y address counter is increased by 1 every time the data is written or read to or from MPU.

Status Read

R/W	D/I	DB7	DB6	DB5	DB4	DB3	DB2	DB1	DB0
1	0	Busy	0	On/Off	RESET	0	0	0	0

•Busy

When busy is 1, the LSI is executing internal operations. No instruction are accepted while busy is 1, so you should make sure that busy is 0 before writing the next instruction.

•ON/OFF

Shows the liquid crystal display condition: on condition or off condition.
When on/off is 1, the display is in off condition.
When on/off is 0, the display is in on condition.

•RESET

RESET = 1 shows that the system is being initialized. In this condition, no instructions except status read can be accepted.
RESET = 0 shows that initializing has system is in the usual operation condition.

Write Display Data

R/W	D/I	DB7	DB6	DB5	DB4	DB3	DB2	DB1	DB0
0	1	D	D	D	D	D	D	D	D

Writes 8-bit data DDDDDDDD (binary) into the display data RAM. The Y address is increased by 1 automatically.

Read Display Data

R/W	D/I	DB7	DB6	DB5	DB4	DB3	DB2	DB1	DB0
1	1	D	D	D	D	D	D	D	D

Reads out 8-bit data DDDDDDDD (binary) from the display data RAM. Then Y address is increased by 1 automatically

One dummy read is necessary right after the address setting. For details, refer to the explanation of output register in “Function of Each Block”.

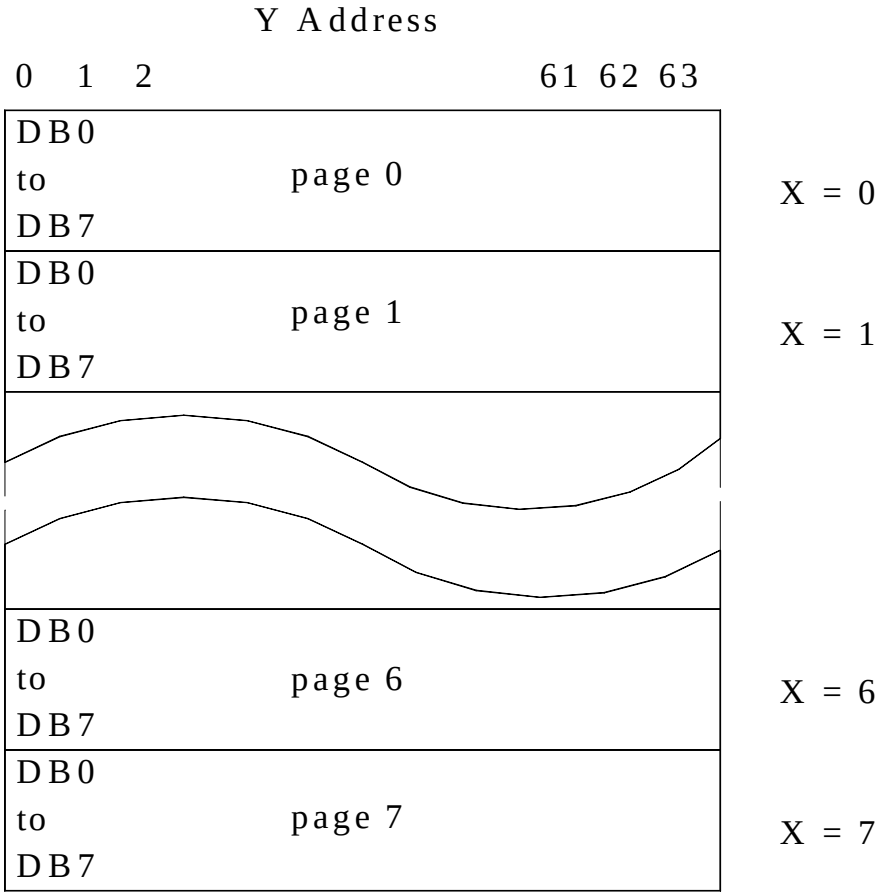

Figure 1.

11. Quality Assurance

11.1 Inspection conditions

The LCD shall be inspected under 40W white fluorescent light.

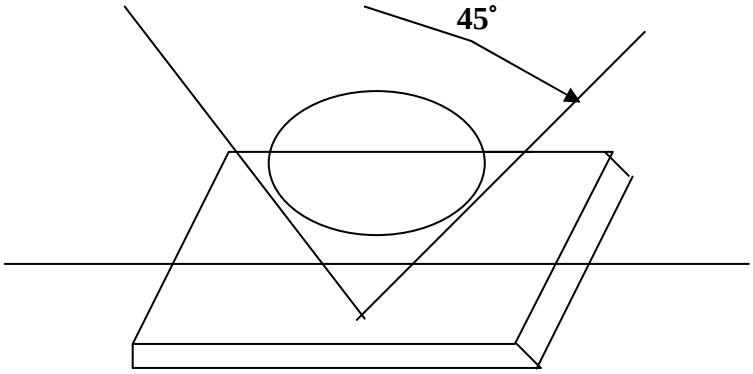

Definition of applicable Zones

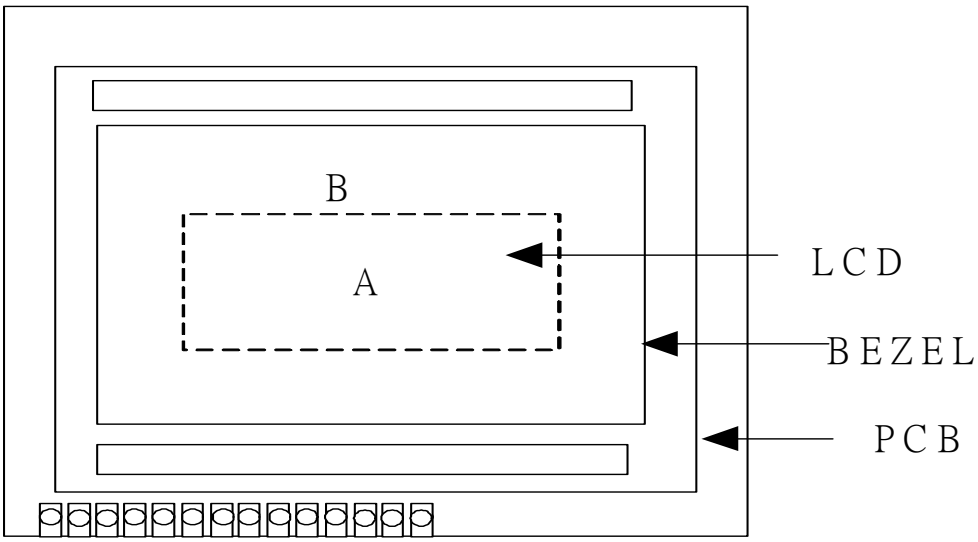

A : Display Area

B : Non-Display Area

11.2 Inspection Parameters

<table>
<tr><th>NO.</th><th>Parameter</th><th>Criteria</th></tr>
<tr><td>1</td><td>Black or White spots</td><td>
<table>
<tr><th rowspan="2">Zone
Dimension</th><th colspan="2">Acceptable Number</th><th rowspan="2">Class Of Defects</th><th rowspan="2">Acceptable Level</th></tr>
<tr><th>A</th><th>B</th></tr>
<tr><td>D＜0.15</td><td>*</td><td>*</td><td rowspan="4">Minor</td><td rowspan="4">2.5</td></tr>
<tr><td>0.15≦D≦0.2</td><td>4</td><td>4</td></tr>
<tr><td>0.2≦D≦0.25</td><td>2</td><td>2</td></tr>
<tr><td>D≦0.3</td><td>0</td><td>1</td></tr>
</table>
D=(Long + Short)/2 *: Disregard
</td></tr>
<tr><td>2</td><td>Scratch, Substances</td><td>
<table>
<tr><th rowspan="2">Zone
X(mm) Y(mm)</th><th colspan="2">Acceptable Number</th><th rowspan="2">Class Of Defects</th><th rowspan="2">Acceptable Level</th></tr>
<tr><th>A</th><th>B</th></tr>
<tr><td>*</td><td>0.04≧W</td><td>*</td><td>*</td><td rowspan="4">Minor</td><td rowspan="4">2.5</td></tr>
<tr><td>3.0≧L</td><td>0.06≧W</td><td>4</td><td>4</td></tr>
<tr><td>2.0≧L</td><td>0.08≧W</td><td>2</td><td>3</td></tr>
<tr><td>—</td><td>0.1＜W</td><td>0</td><td>1</td></tr>
</table>
X: Length Y: Width *: Disregard
Total defects should not exceed 4/module
</td></tr>
<tr><td>3</td><td>Air Bubbles (between glass & polarizer)</td><td>
<table>
<tr><th rowspan="2">Zone
Dimension</th><th colspan="2">Acceptable Number</th><th rowspan="2">Class Of Defects</th><th rowspan="2">Acceptable Level</th></tr>
<tr><th>A</th><th>B</th></tr>
<tr><td>D≦0.2</td><td>*</td><td>*</td><td rowspan="3">Minor</td><td rowspan="3">2.5</td></tr>
<tr><td>0.2＜D≦0.5</td><td>2</td><td>*</td></tr>
<tr><td>0.5＜D</td><td>0</td><td>1</td></tr>
</table>
*: Disregard
Total defects shall not excess 3/module.
</td></tr>
</table>

4	Uniformity	(1) Pixel shape (with Dent) 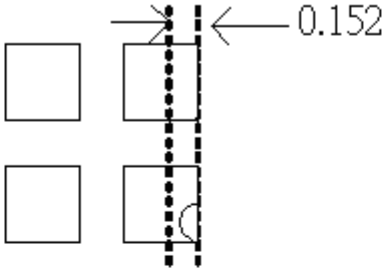 (2) Pixel shape (With Projection) 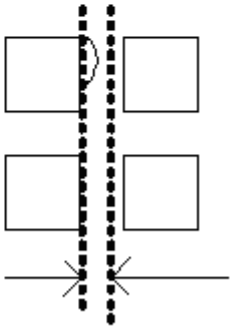 Should not be connected to next pixel 0.152 (3) Pin hole 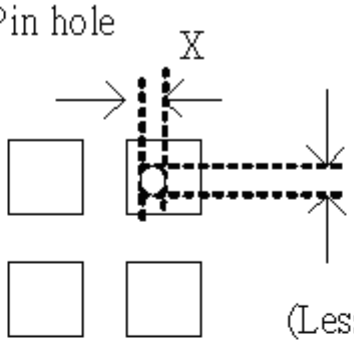 (X+Y)/2≦0.2mm (Less than 0.1mm is no counted) (4)Deformation 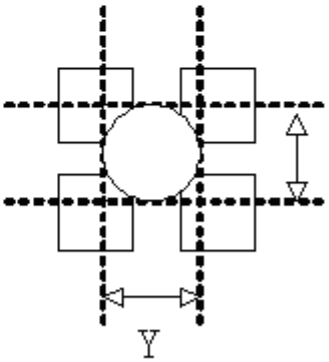 (X+Y)/2 ≦0.3mm Total acceptable number : 1/pixel,5/cell

12. Reliability

■Content of Reliability Test

Environmental Test				
No.	Test Item	Content of Test	Test Condition	Applicable Standard
1	High Temperature storage	Endurance test applying the high storage temperature for a long time.	60℃ 96hrs	——
2	Low Temperature storage	Endurance test applying the high storage temperature for a long time.	-10℃ 96hrs	——
3	High Temperature Operation	Endurance test applying the electric stress (Voltage & Current) and the thermal stress to the element for a long time.	50℃ 96hrs	——
4	Low Temperature Operation	Endurance test applying the electric stress under low temperature for a long time.	-0℃ 96hrs	——
5	Humidity Test	Endurance test applying the high humidity storage for a long time.	40℃,90%RH 96hrs	——
6	Thermal Shock Test	Endurance test applying the low and high temperature cycle. -10℃ 25℃ 60℃ 30min 5min 30min 1 cycle	-10℃/ 60℃ 5 cycles	——
7	Vibration test	Endurance test applying the vibration during transportation and using.	Total Fixed Amplitude:1.5mm Vibration Frequency :10~55Hz One cycle 60 seconds to 3 direction of X,Y,Z for each 15minutes	——

13.Drawing

PIN NO.	SYMBOL
1	$\overline{CS1}$
2	$\overline{CS2}$
3	GND
4	VDD
5	VLC
6	D/I
7	R/$\overline{W}$
8	E
9	DB0
10	DB1
11	DB2
12	DB3
13	DB4
14	DB5
15	DB6
16	DB7
17	RST
18	VEE
19	A
20	K

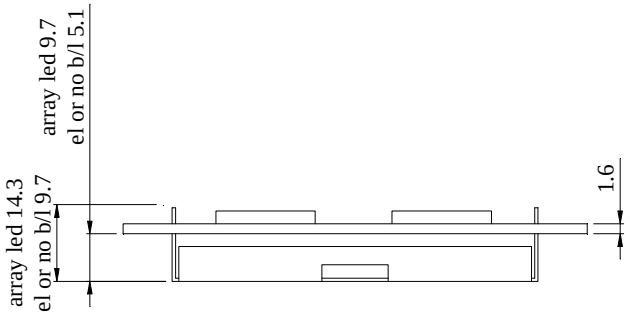

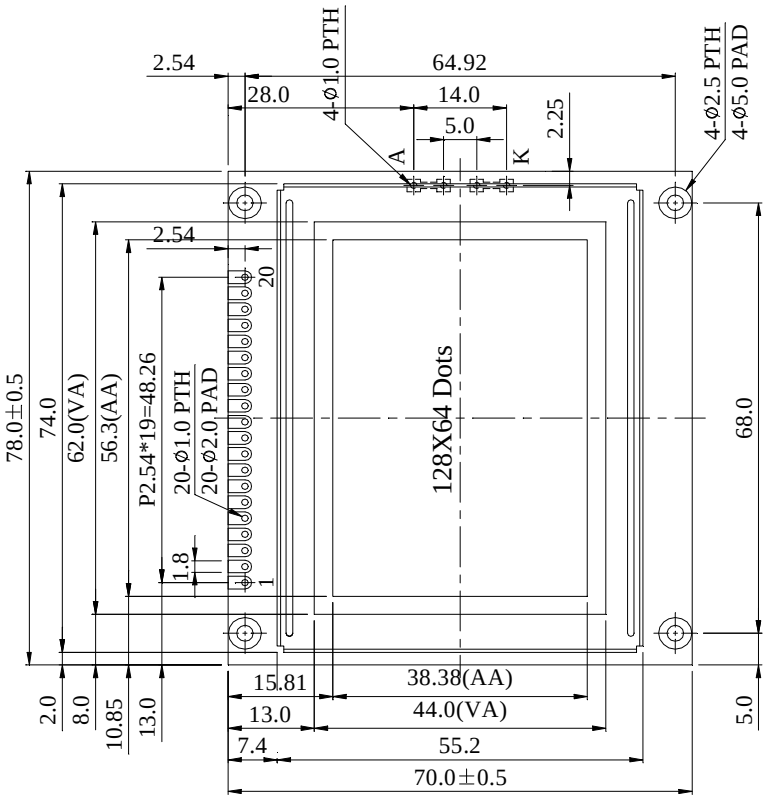

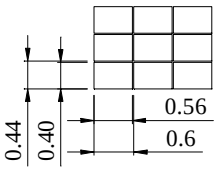

DOT SIZE
SCALE 10/1

The non-specified tolerance of dimension is ±0.3 mm .

SCALE: 1/1	REV: 0	BOLYMIN,INC	
UNIT: mm	PAGE: 1/1	MODEL	BG12864C
APPROVE		TITLE	LCM DRAWING
CHECK			
DRAW		DWG NO.	